MAGNETIC
High Power Factor

RS236P

Ballast Type:	Electromagnetic
Input Voltage:	120VAC +5%,-10%
Input Frequency:	60 Hz.

Starting Method:	Rapid Start
Lamp Connection:	Series
Unit Weight	3.38 lb.

ELECTRICAL SPECIFICATION:

Line Voltage (V)	Lamp Type	Lamp Watts	No. of Lamps	Line Current (A)	Input Power (W)	Power Factor	Max Current THD (%)	Current Crest Factor	Ballast Factor	Wiring Diagram	B.E.F.
120	FT36W/2G11	36	2	0.70	78	≥0.93	≤20	≤1.7	0.96	116	1.23

PERFORMANCE:
- Electromagnetic lead type ballast
- Rapid Start
- Series operation
- High power factor
- Encased & potted
- Sound rated A
- Meets ANSI C82.1

APPLICATION:
- Maximum case temperature: 194ºF/90ºC
- Maximum ambient temperature: 104ºF/40ºC
- Minimum starting temperature: 50ºF/10ºC
- Remote mounting: 10ft.

SAFETY:
- UL listed (Class P, Type HL, Type 1 outdoor)
- CSA certified
- Automatic reset thermal protector
- No PCB's

STYLE:

11A

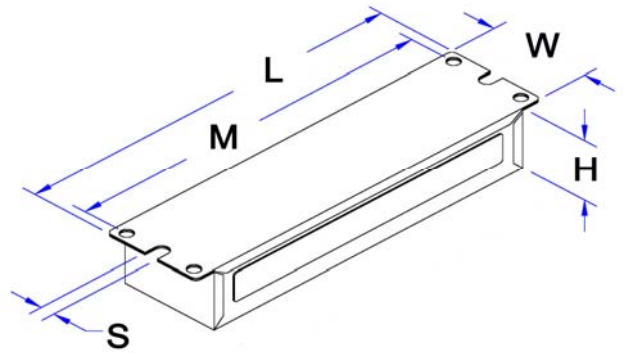

H	W	L	M	S
1 1/2	2 3/8	9 7/16	8 7/8	5/16
1.50	2.38	9.44	8.88	0.31
3.81 cm	6.03 cm	23.98 cm	22.56 cm	0.79 cm

WIRING DIAGRAM:

116

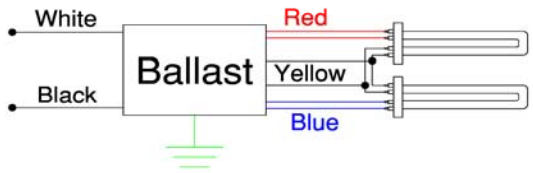

Standard lead lengths:
- Blk: 20"
- Red: 20"
- Yel: 20"
- Wht: 20"
- Blue: 20"

* 3/8" Strip

WARRANTY

Robertson Worldwide warrants to the purchaser that this ballast will be free from defects in material or workmanship for a period of 2 years from date of manufacture when properly installed and under normal conditions of use. For more information on Robertson Worldwide's ballasts, call 1-800-323-5633 or visit www.robertsonww.com. Specifications subject to change without notice.

Revised 1/10/05

ROBERTSON WORLDWIDE
13611 Thornton Rd, Blue Island, IL 60406, TEL: 1-800-323-5633, FAX: 1-877-388-2420, www.robertsonww.com