MAGNETIC
Normal Power Factor

O4827RC

Ballast Type:	Electromagnetic	Starting Method:	Preheat	Unit Weight:	0.60 lb.
Input Voltage:	277VAC+5%,-10%	Lamp Connection:	Series	Carton Quantity:	60
Input Frequency:	60 Hz.	Unit Color:	Raw	Skid Quantity:	3600

ELECTRICAL SPECIFICATION:

Line Voltage (V)	Lamp Type	Lamp Watts	No. of Lamps	Line Current (A)	Input Power (W)	Power Factor	Max Current THD (%)	Current Crest Factor	Ballast Factor	Wiring Diagram	B.E.F.
277	CFT5W/G23	5	1	0.18	10	≥0.22	≤15	≤1.7	1.00	101	10.00
277	CFT7W/G23	7	1	0.16	11	≥0.25	≤15	≤1.7	0.90	101	8.18
277	CFT9W/G23	9	1	0.15	11	≥0.27	≤15	≤1.7	0.85	101	7.73
277	CFQ9W/G23	9	1	0.15	11	≥0.27	≤15	≤1.7	0.85	101	7.73

PERFORMANCE:
- Electromagnetic reactor type ballast
- Preheat start
- Series operation
- Normal power factor
- Open core and coil
- Sound rated A
- Meets ANSI C82.1

APPLICATION:
- Maximum case temperature: 194ºF/90ºC
- Maximum ambient temperature: 104ºF/40ºC
- Minimum starting temperature CFL: 0ºF/-18ºC
- Remote mounting: 10ft.

SAFETY:
- UL/935 (Type 1 outdoor) recognized component
- No PCB's

STYLE:

01

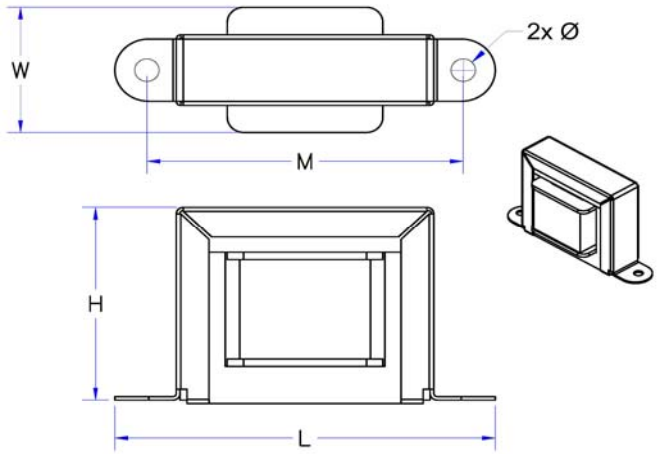

H	W	L	M	Ø
1 5/8	1 9/32	2 13/16	2 3/8	3/16
1.63	1.28	2.81	2.38	0.19
4.13 cm	3.18 cm	7.14 cm	6.03 cm	0.47 cm

WIRING DIAGRAM:

101

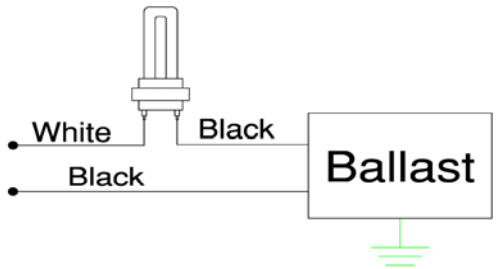

Standard lead lengths:
- Blk: 7 x 7"

* 3/8" Strip

WARRANTY

Robertson Worldwide warrants to the purchaser that this ballast will be free from defects in material or workmanship for a period of 2 years from date of manufacture when properly installed and under normal conditions of use. For more information on Robertson Worldwide's ballasts, call 1-800-323-5633 or visit www.robertsonww.com. Specifications subject to change without notice.

Revised 9-19-05

ROBERTSON WORLDWIDE
13611 Thornton Rd, Blue Island, IL 60406, TEL: 1-800-323-5633, FAX: 1-877-388-2420, www.robertsonww.com